JY-200ST

Model No. JY-200ST



SPECIFICATIONS

	JY-200ST
	26-28
	1019-896 /
	58.67
	67.7 /
	105
	0-200
	4.45
	130
	2

JY-200ST
mm 26-28
kg/cm2 1019-896
58-67
cm3 / 67 76.7
mm 105
0-200
4.45
130
2
25
480*310
310*170
100/60
180
280/80
Ejetor 1.3
35
kg/cm2 140
L/min 29.5

[illegible]100 [illegible]
[illegible]L/hr 400-600
[illegible]kW/hp 3.75HP
[illegible]kW 1.8
[illegible]kW 5.5
[illegible]0.68 [illegible]
[illegible](LxWxH) [illegible]1.4*0.90*2.37 [illegible]
[illegible]0.88 [illegible]
[illegible](LxWxH) [illegible]1.49*1.08*2.25 [illegible]
[illegible]

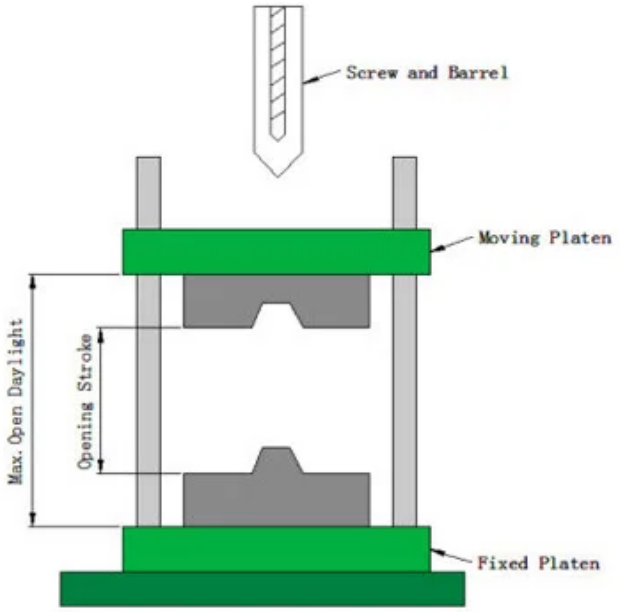

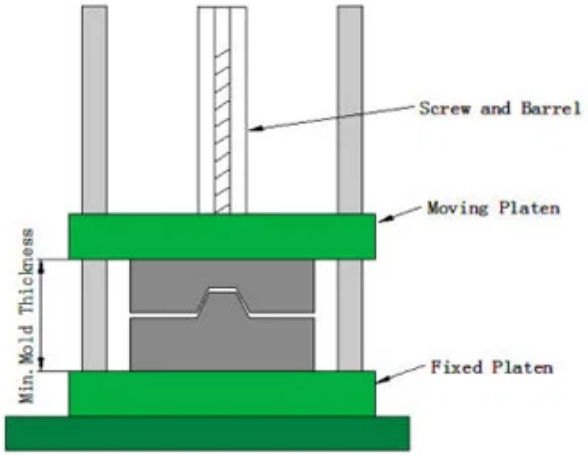

Opening Mold Clamping Mold

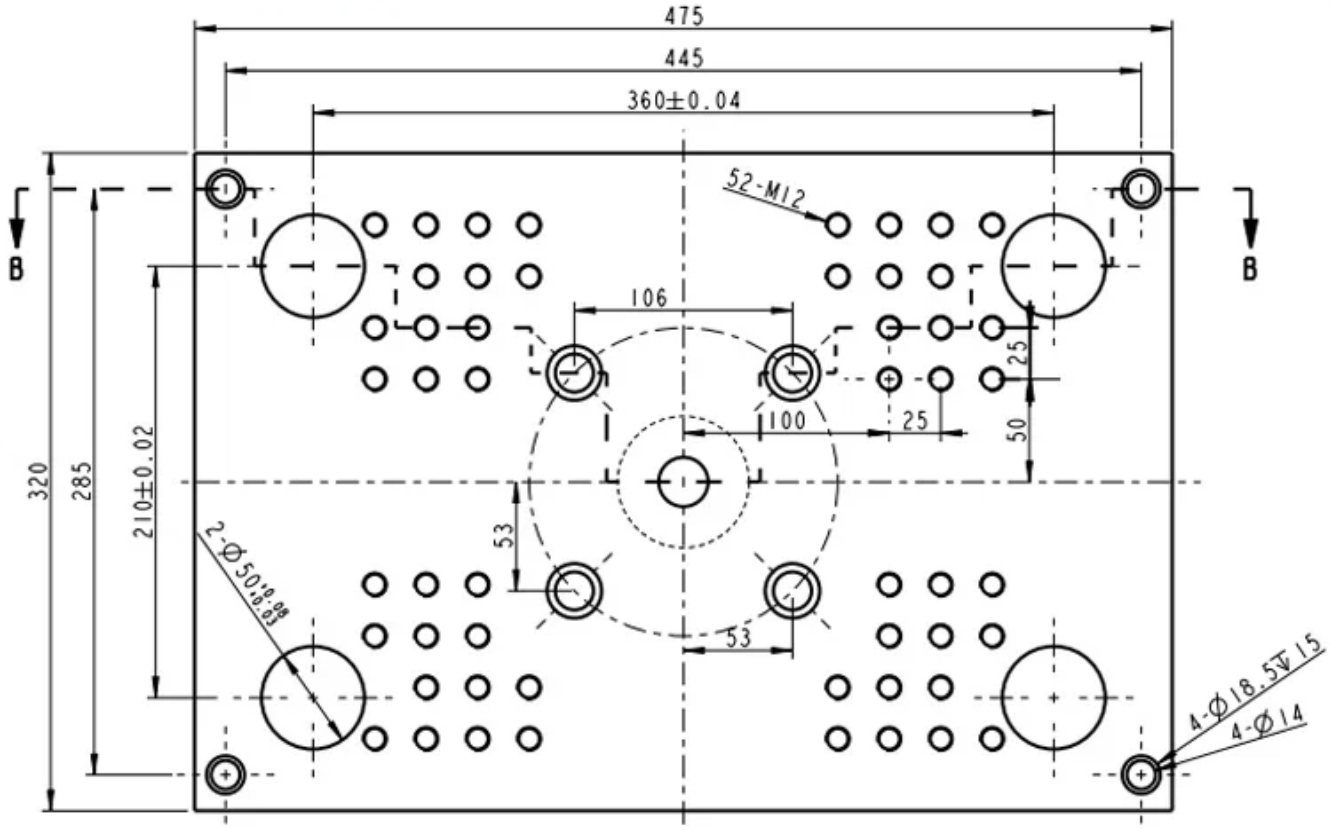

Product Features

1)Straight screw ejected assembly.
2)Two(three)-phase temperature, ejected speed, backing pressure, and screw speed is suitable for various plastic to be confectioned.
3)Low-die fixed top active mode makes inserted objects excellent positioned features and the machine has left out the attachment for finished goods.
4)Low-pressure closed die assembly can protect the safety of the die.
5)Material tube can be lifted. It is easy to clean the stub bar. It is easy to fix the die.
6)Can be installed on a single mold or double shuttle table.

Application

